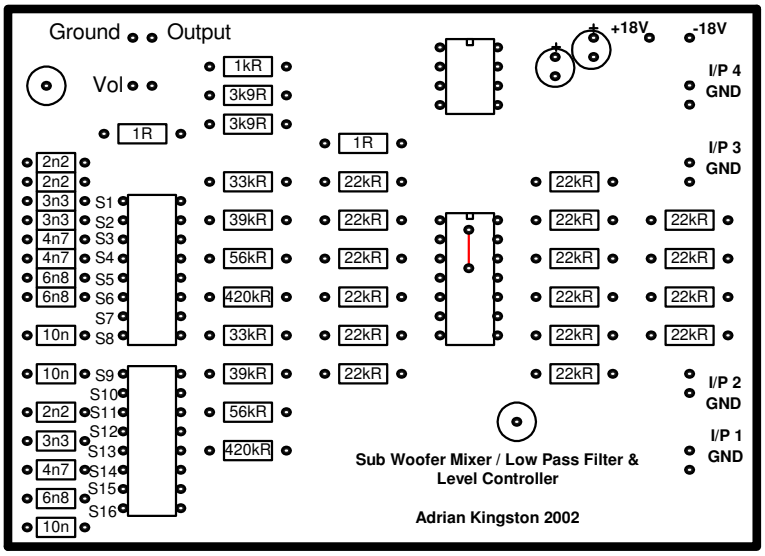
Ground
Output
Vol
1R
1kR
3k9R
3k9R
1R
2n2
2n2
3n3
3n3
4n7
4n7
6n8
6n8
10n
S1
S2
S3
S4
S5
S6
S7
S8
33kR
39kR
56kR
420kR
33kR
22kR
22kR
22kR
22kR
22kR
+18V
-18V
I/P 4
GND
I/P 3
GND
22kR
22kR
22kR
22kR
22kR
22kR
22kR
22kR
22kR
22kR
10n
S9
S10
S11
S12
S13
S14
S15
S16
2n2
3n3
4n7
6n8
10n
39kR
56kR
420kR
22kR
22kR
I/P 2
GND
I/P 1
GND
Sub Woofer Mixer / Low Pass Filter &
Level Controller
Adrian Kingston 2002